heimatec®
ANGLE HEADS

heimatec GmbH-Renchen, Germany

Heimatec is an international manufacturing company headquartered in Renchen, Germany. Heimatec's 40,000 square foot facility, on 7.5 acres, is home to over 100 employees including office and manufacturing staff. Our experienced and innovative staff is dedicated to providing our customers with the latest and best technology available. Our U.S. Headquarters, which is located in the Chicagoland area, services North America.

## We set the standard for the highest precision and most advanced technology in the machine tool accessory market

Constant innovation and attention to detail along with our unparalleled design capabilities allow Heimatec users to enjoy the benefits of the most productive angle heads, live tools, and multiple spindle tools available.

Exceptional customer service and expert technical support are always available.

Extensive inventory in Prospect Heights, Illinois with additional products shipping from factory stock in Renchen, Germany.

# Designed for Superior Performance

Heimatec angle heads are made from high-tensile strength aluminum. High-precision spindle bearings maintain the highest possible spindle concentricity.

All the gears on these angle heads have inclined teeth made from high-resistance gear steel and have been specially hardened, ground and lapped in sets to provide the smoothest transmission output possible.

- Powerful, accurate, and rigid
- Applications include milling, drilling, and tapping
- Torque rating up to 150 Nm
- Up to 1:4 gear ratio available
- Spindle speeds up to 24,000 rpm
- 360º body rotation
- Interchangeable torque arms
- Compatible with most Automatic Tool Changers

## Table of Contents


2-3 Standard Line Overview
4-5 Slim Line Overview
6-7 Single Output - Standard Duty
8-9 Single Output - Heavy Duty
10-11 Single Output - Heavy Duty Plus
12-13 Single Output - Offset (External Nut)
14-15 Single Output - Offset Slim Body
16-17 Dual Output - Standard Duty
18-19 Dual Output - Heavy Duty
20-21 Adjustable - Standard Duty
22-23 Adjustable - Heavy Duty
24 Custom & Special Tooling

heimatec®

# Angle Heads - standard line

## Angle Heads: standard

For machining applications without clearance issues

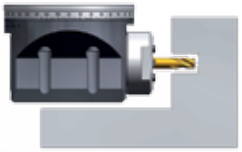

## Angle Heads: dual output

For machining applications without clearance issues and 2 directions

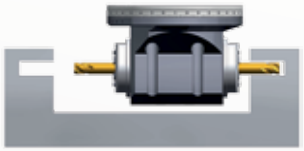

## Angle Heads: standard offset

For machining applications without clearance issues

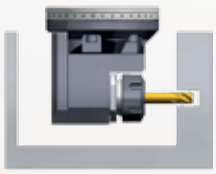

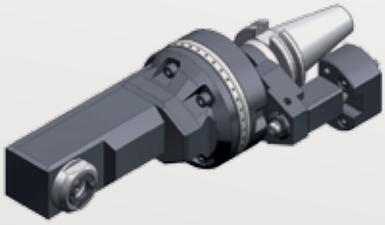

## Angle Heads: offset slim

Offset style to maximize the usable tool length plus slim design for machining in restricted spaces

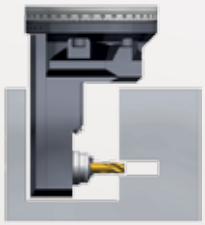

## Angle Heads: ± 90° adjustable

For machining tasks at compound angles

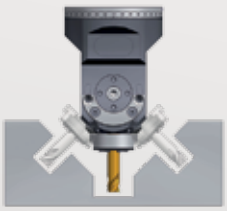

# Features and Overview

### 1. Machine adaption

ANSI B 5.50/ CAT
MAS 403 BT
DIN 69893 - HSK
DIN 69871 A - SK

### 2. Arrestor ring

Locks the tool drive taper

### 3. Housing

45/90° angle possibilities, depending on the required use

### 4. Torque arm

For locking the housing of the angle head on the machining spindle to prevent rotation

### 5. Scale ring

For aligning the working angle

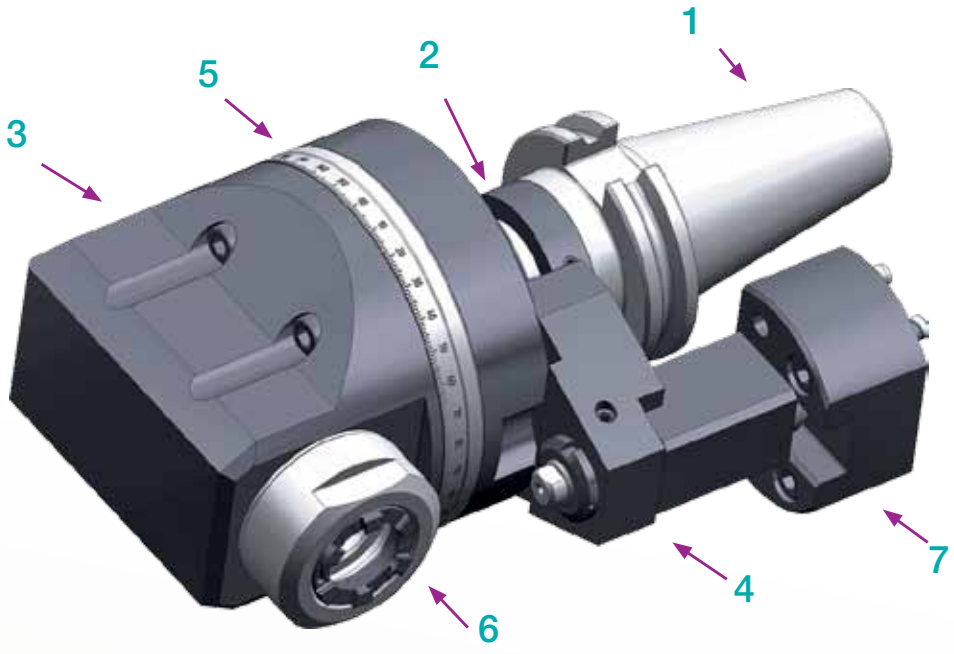


### 6. Output

The standard output is ER collets

### 7. Stop block

For locking and preventing the rotation of the angle head. Custom block can be manufactured to machine specification.

# Accessories

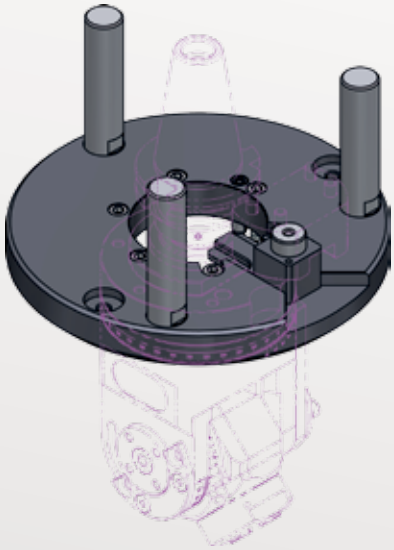

### Support flange with integrated torque arm

For additional support to stabilize and reduce the vibration of the entire system.

The additional support will be produced to customer‘s instruction and the machine specifications.

heimatec®

# Angle Heads - slim line

For special machining applications

## Angle Heads MFC 300 M / 90°
## not for use with coolant

min Ø 12 mm id

## Angle Heads MFC 300 S / 90°
## not for use with coolant

min Ø 16 mm id

## Angle Heads IC 300 / 90°
## not for use with coolant

min Ø 24 mm id

## Angle Heads KC 300 / 45°
## not for use with coolant

min Ø 22 mm id at 45°

## Angle Heads RA 200 / 90°

min Ø 38 mm id

## Angle Heads RA 100 / 90°

min Ø 51 mm id

# Features and Overview

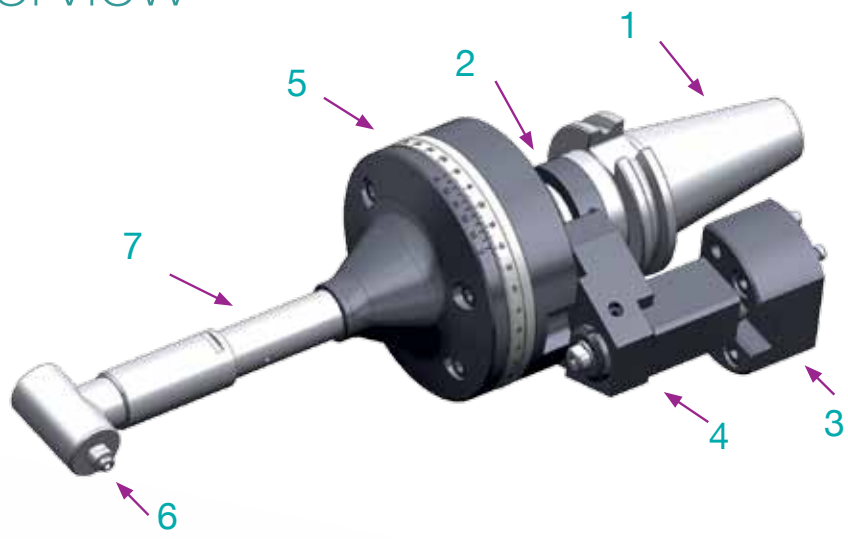


### 1. Machine adaption

ANSI B 5.50/ CAT
MAS 403 BT
DIN 69893 - HSK
DIN 69871 A - SK

### 2. Arrestor ring

Locks the tool drive taper

### 3. Stop block

For locking and preventing the rotation of the angle head. Custom block can be manufactured to machine specification.

### 4. Torque arm

For locking the housing of the angle head on the machining spindle to prevent rotation

### 5. Scale ring

For aligning the working angle

### 6. Output

The standard output is ER collets

### 7. Adapter / extension

45/90° angle possibilities, depending on the required use

# Combinations

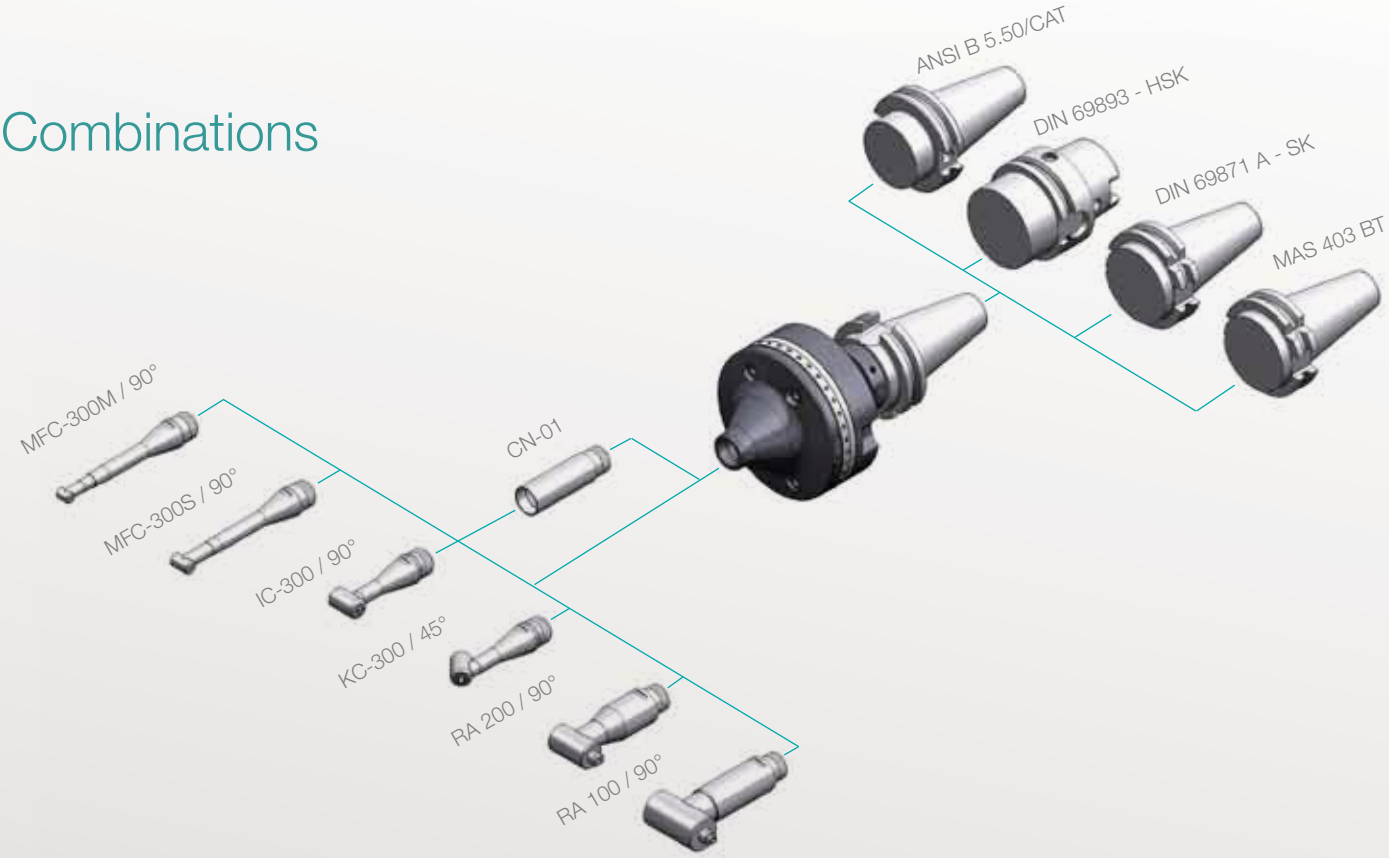

heimatec®

# Right Angle Heads with single output - **standard duty**

- Compact Design
- Shortest gauge line
- Standard with u-tec output
- Maximum torque: 60 Nm
- Maximum RPM: 8000
- Gear Ratio: 1:1

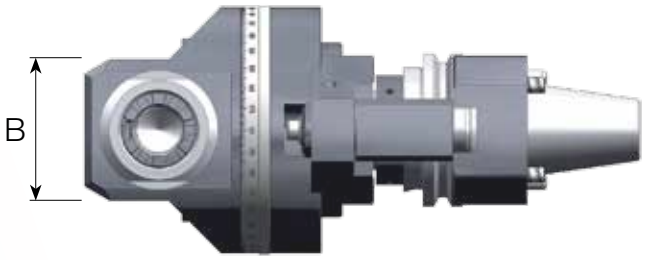


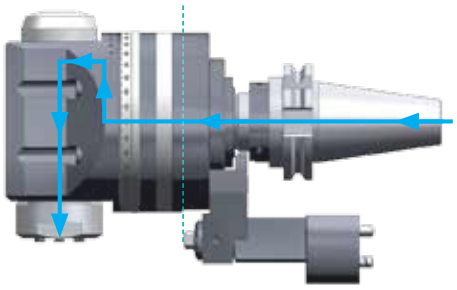

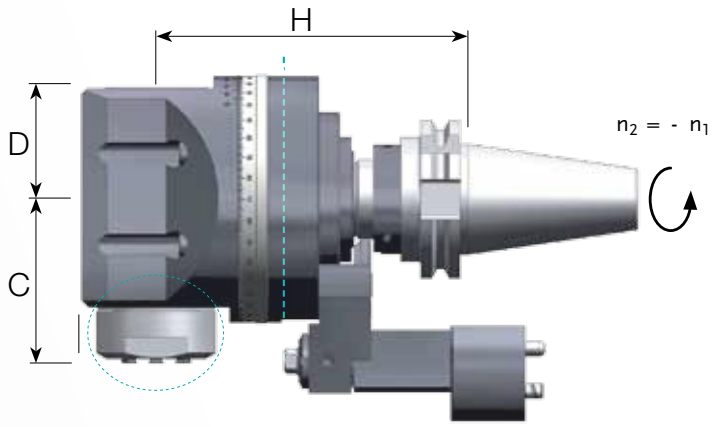


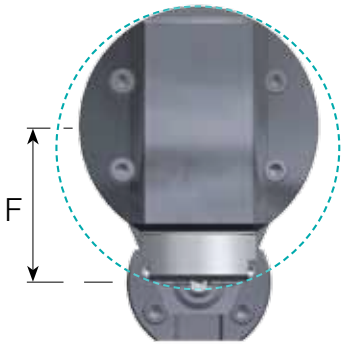


# Right Angle Heads with single output - **standard duty**

| Part No. | Input | Output | RPM | torque | lb | H | B | C | D | F | IC |
|---|---|---|---|---|---|---|---|---|---|---|---|
| 7 030 45 007 | CAT 40 | ER 25 UT | 8000 | 25 | 11.5 | 125.5 | 57 | 65.9 | 45 | 65 | |
| 7 030 45 013 | CAT 40 | ER 25 UT | 8000 | 25 | 11.5 | 143.5 | 57 | 65.9 | 61 | 65 | 70 bar |
| 7 030 45 026* | CAT 40 | ER 25 UT | 8000 | 25 | 11.5 | 125.5 | 57 | 65.9 | 45 | 59 | |
| 7 030 45 029* | CAT 40 | ER 25 UT | 8000 | 25 | 11.5 | 143.5 | 57 | 65.9 | 61 | 59 | 70 bar |
| 7 030 45 011 | BT 40 | ER 25 UT | 8000 | 25 | 11.5 | 125.5 | 57 | 65.9 | 45 | 65 | |
| 7 030 45 017 | BT 40 | ER 25 UT | 8000 | 25 | 11.5 | 143.5 | 57 | 65.9 | 61 | 65 | 70 bar |
| 7 030 55 002 | HSK 63 | ER 25 UT | 8000 | 25 | 11.5 | 132.5 | 57 | 65.9 | 45 | 65 | |
| 7 030 55 004 | HSK 63 | ER 25 UT | 8000 | 25 | 11.5 | 150.5 | 57 | 65.9 | 61 | 65 | 70 bar |
| 7 030 66 013 | CAT 50 | ER 32 UT | 8000 | 60 | 24 | 180 | 80 | 65.6 | 49 | 110 | |
| 7 030 66 019 | CAT 50 | ER 32 UT | 8000 | 60 | 24 | 180 | 80 | 65.6 | 49 | 110 | 70 bar |
| 7 030 66 035* | CAT 50 | ER 32 UT | 8000 | 60 | 24 | 180 | 80 | 65.6 | 49 | 84 | |
| 7 030 66 037* | CAT 50 | ER 32 UT | 8000 | 60 | 24 | 180 | 80 | 65.6 | 49 | 84 | 70 bar |
| 7 030 66 016 | BT 50 | ER 32 UT | 8000 | 60 | 24 | 190 | 80 | 65.6 | 49 | 110 | |
| 7 030 66 021 | BT 50 | ER 32 UT | 8000 | 60 | 24 | 190 | 80 | 65.6 | 49 | 110 | 70 bar |
| 7 030 76 001 | HSK 100 | ER 32 UT | 8000 | 60 | 24 | 190 | 80 | 65.6 | 49 | 110 | |
| 7 030 76 003 | HSK 100 | ER 32 UT | 8000 | 60 | 24 | 190 | 80 | 65.6 | 49 | 110 | 70 bar |

* Haas specific torque arm and stop block

# Right Angle Heads with single output - **heavy duty**

- Rigid Design
- Larger Capacity
- Standard with u-tec output
- Maximum torque: 60 Nm
- Maximum RPM: 8000
- Gear Ratio: 1:1

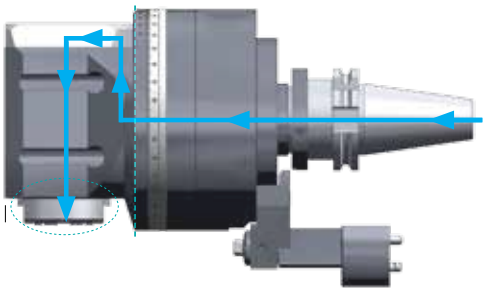

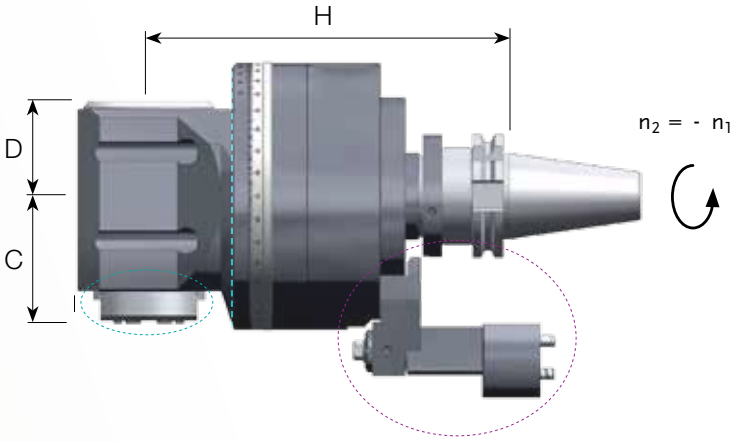


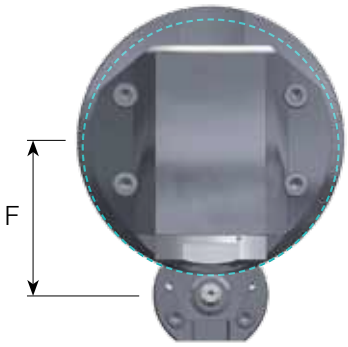


# Right Angle Heads with single output - **heavy duty**

| Part No. | Input | Output | RPM | torque | lb | H | B | C | D | F | IC |
|---|---|---|---|---|---|---|---|---|---|---|---|
| 7 030 46 017 | CAT 40 | ER 32 UT | 8000 | 60 | 19 | 187 | 80 | 65.6 | 49 | 65 | |
| 7 030 46 021 | CAT 40 | ER 32 UT | 8000 | 60 | 19 | 187 | 80 | 65.6 | 60 | 65 | 70 bar |
| 7 030 46 015 | BT 40 | ER 32 UT | 8000 | 60 | 19 | 187 | 80 | 65.6 | 49 | 65 | |
| 7 030 46 025 | BT 40 | ER 32 UT | 8000 | 60 | 19 | 187 | 80 | 65.6 | 60 | 65 | 70 bar |
| 7 030 56 006 | HSK 63 | ER 32 UT | 8000 | 60 | 19 | 187 | 80 | 65.6 | 49 | 65 | |
| 7 030 56 008 | HSK 63 | ER 32 UT | 8000 | 60 | 19 | 187 | 80 | 65.6 | 60 | 65 | 70 bar |
| 7 030 67 038 | CAT 50 | ER 40 UT | 8000 | 60 | 26 | 180 | 84 | 102 | 65 | 110 | |
| 7 030 67 049 | CAT 50 | ER 40 UT | 8000 | 60 | 26 | 180 | 84 | 102 | 69 | 110 | 70 bar |
| 7 030 67 047 | BT 50 | ER 40 UT | 8000 | 60 | 26 | 190 | 84 | 102 | 65 | 110 | |
| 7 030 67 053 | BT 50 | ER 40 UT | 8000 | 60 | 26 | 190 | 84 | 102 | 69 | 110 | 70 bar |
| 7 030 77 003 | HSK 100 | ER 40 UT | 8000 | 60 | 26 | 190 | 84 | 102 | 65 | 110 | |
| 7 030 77 005 | HSK 100 | ER 40 UT | 8000 | 60 | 26 | 190 | 84 | 102 | 69 | 110 | 70 bar |

# Right Angle Heads with single output - **heavy duty plus**

- Designed for heavy milling
- Optional CAT 40 output
- Maximum torque: 120 Nm
- Maximum RPM: 6000
- Gear Ratio: 1:1

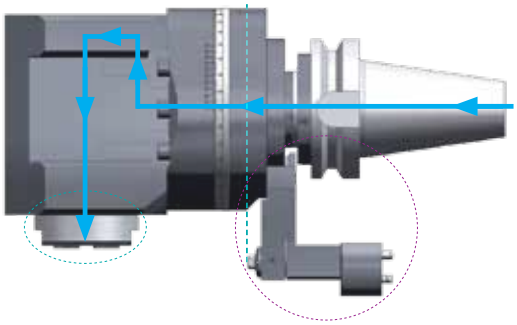

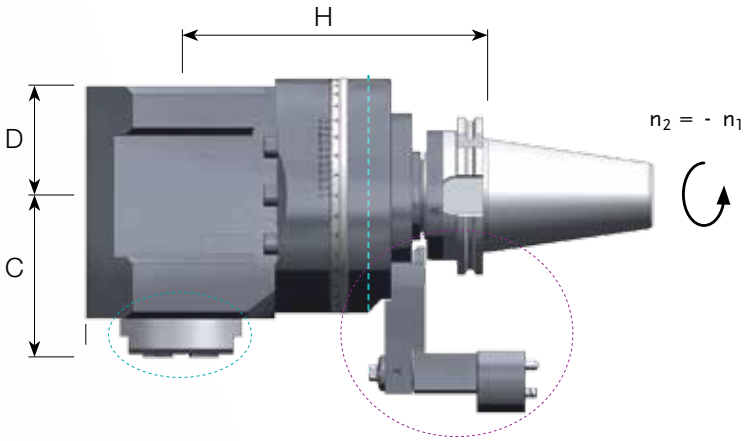


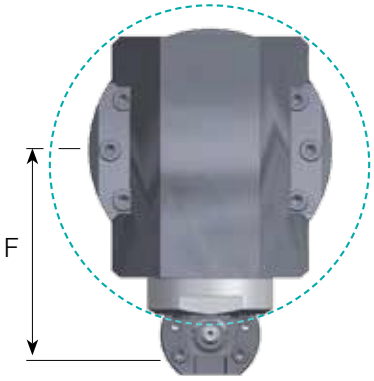


# Right Angle Heads with single output - **heavy duty plus**

| Part No. | Input | Output | RPM | torque | lb | H | B | C | D | F | IC |
|---|---|---|---|---|---|---|---|---|---|---|---|
| 7 030 67 056 | CAT 50 | ER 40 UT | 6000 | 120 | 39 | 190 | 118 | 91 | 72 | 110 | |
| 7 030 67 060 | CAT 50 | ER 40 UT | 6000 | 120 | 39 | 220 | 118 | 91 | 80 | 110 | 70 bar |
| 7 030 67 058 | BT 50 | ER 40 UT | 6000 | 120 | 39 | 200 | 118 | 91 | 72 | 110 | |
| 7 030 67 064 | BT 50 | ER 40 UT | 6000 | 120 | 39 | 230 | 118 | 91 | 80 | 110 | 70 bar |
| 7 030 77 007 | HSK 100 | ER 40 UT | 6000 | 120 | 39 | 200 | 118 | 91 | 72 | 110 | |
| 7 030 77 009 | HSK 100 | ER 40 UT | 6000 | 120 | 39 | 230 | 118 | 91 | 80 | 110 | 70 bar |
| 7 030 67 043 | CAT 50 | CAT 40 | 6000 | 120 | 36 | 190 | 118 | 88 | 73 | 110 | |
| 7 030 67 068 | BT 50 | CAT 40 | 6000 | 120 | 36 | 200 | 118 | 88 | 73 | 110 | |
| 7 030 77 011 | HSK 100 | CAT 40 | 6000 | 120 | 36 | 200 | 118 | 88 | 73 | 110 | |

# Right Angle Heads with single output - **offset (external nut)**

- Lightweight
- Easy to tool change
- External nut style
- Maximum torque: 50 Nm
- Maximum RPM: 8000
- Gear Ratio: 1:1

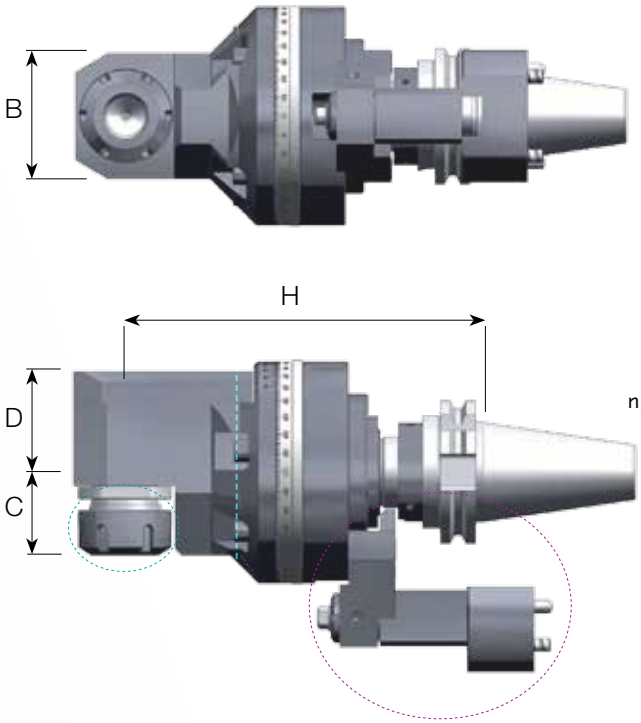


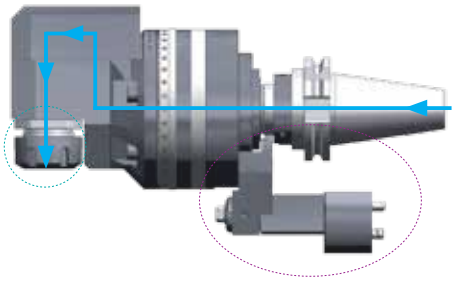

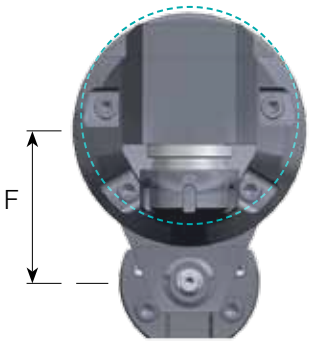


# Right Angle Heads with single output - **offset (external nut)**

| Part No. | Input | Output | RPM | torque | lb | H | B | C | D | F | IC |
|---|---|---|---|---|---|---|---|---|---|---|---|
| 7 033 45 011 | CAT 40 | ER 25 | 8000 | 25 | 11 | 160 | 57 | 37 | 45 | 65 | |
| 7 033 45 005 | CAT 40 | ER 25 | 8000 | 25 | 11 | 178 | 57 | 37 | 64 | 65 | 70 bar |
| 7 033 45 019* | CAT 40 | ER 25 | 8000 | 25 | 11 | 160 | 57 | 37 | 45 | 59 | |
| 7 033 45 032* | CAT 40 | ER 25 | 8000 | 25 | 11 | 178 | 57 | 37 | 64 | 59 | 70 bar |
| 7 033 66 017 | CAT 50 | ER 32 | 6000 | 50 | 28 | 230 | 80 | 38 | 62 | 110 | |
| 7 033 66 023 | CAT 50 | ER 32 | 6000 | 50 | 28 | 230 | 80 | 38 | 71 | 110 | 70 bar |
| 7 033 66 036 | CAT 50 | ER 32 | 6000 | 50 | 28 | 230 | 80 | 38 | 62 | 84 | |
| 7 033 66 035 | CAT 50 | ER 32 | 6000 | 50 | 28 | 230 | 80 | 38 | 71 | 84 | 70 bar |

* Haas specific torque arm and stop block

# Right Angle Heads with single output - **offset slim body**

- Designed for restricted spaces
- Narrow Design
- Standard with u-tec output
- Maximum torque: 40 Nm
- Maximum RPM: 8000
- Gear Ratio: 1:1

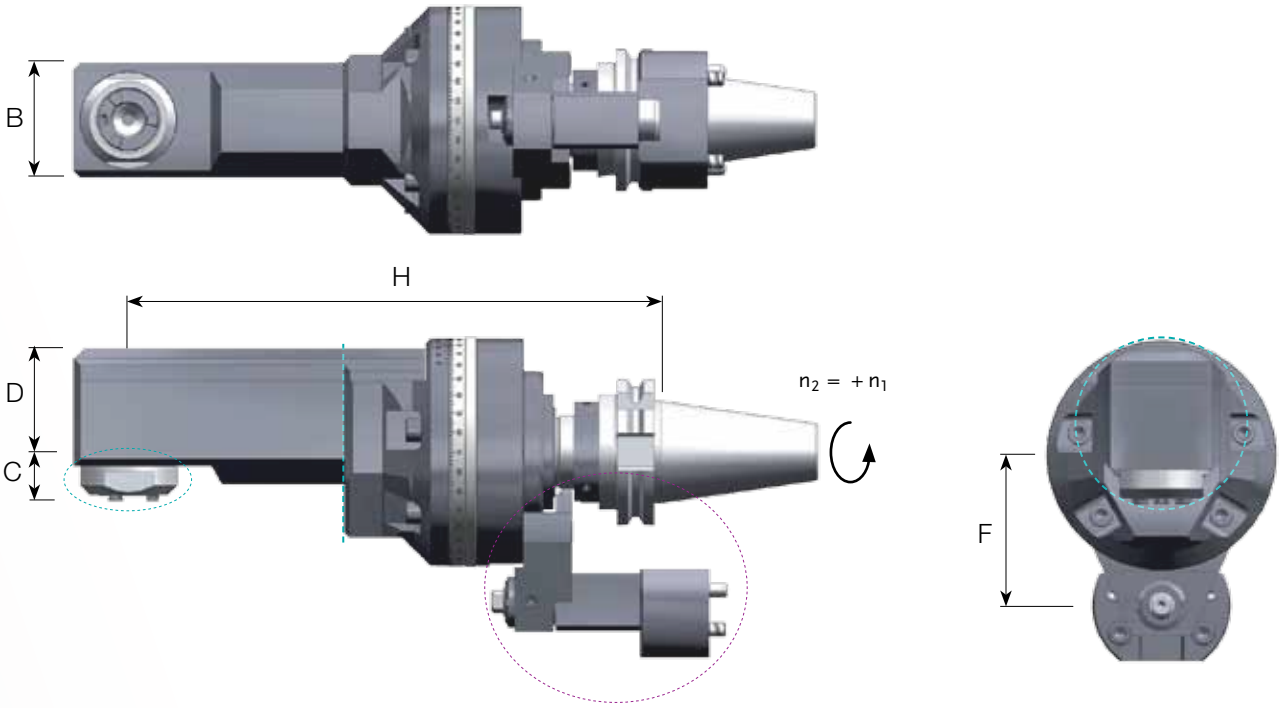


# Right Angle Heads with single output - **offset slim body**

| Part No. | Input | Output | RPM | torque | lb | H | B | C | D | F | IC |
|---|---|---|---|---|---|---|---|---|---|---|---|
| 7 033 23 004* | BT 30 | ER 11 | 8000 | 6 | 4.5 | 130 | 35 | 16.7 | 32.3 | 65 | |
| 7 033 23 010* | BT 30 | ER 11 | 8000 | 6 | 4.5 | 142 | 35 | 16.7 | 50.5 | 65 | 70 bar |
| 7 033 23 005** | BT 30 | ER 11 | 8000 | 6 | 4.5 | 130 | 35 | 16.7 | 32.3 | 65 | |
| 7 033 23 011** | BT 30 | ER 11 | 8000 | 6 | 4.5 | 142 | 35 | 16.7 | 50.5 | 65 | 70 bar |
| 7 033 44 014 | CAT 40 | ER 20 UT | 8000 | 25 | 12 | 232 | 50 | 21 | 45 | 65 | |
| 7 033 44 018 | BT 40 | ER 20 UT | 8000 | 25 | 12 | 232 | 50 | 21 | 45 | 65 | |
| 7 033 54 002 | HSK 63 | ER 20 UT | 8000 | 25 | 12 | 239 | 50 | 21 | 45 | 65 | |
| 7 033 65 002 | CAT 50 | ER 25 UT | 8000 | 40 | 27 | 307 | 58 | 9.9 | 62 | 110 | |
| 7 033 65 006 | BT 50 | ER 25 UT | 8000 | 40 | 27 | 317 | 58 | 9.9 | 62 | 110 | |
| 7 033 75 001 | HSK 100 | ER 25 UT | 8000 | 40 | 27 | 317 | 58 | 9.9 | 62 | 110 | |

* Stop block not included

** RoboDrill specific torque arm and stop block

# Right Angle Heads with dual output - **standard duty**

- Performs two machining operations
- Eliminates the need for two tools
- Compact Design
- Shortest gauge line
- Standard with u-tec output
- Maximum torque: 60 Nm
- Maximum RPM: 8000
- Gear Ratio: 1:1

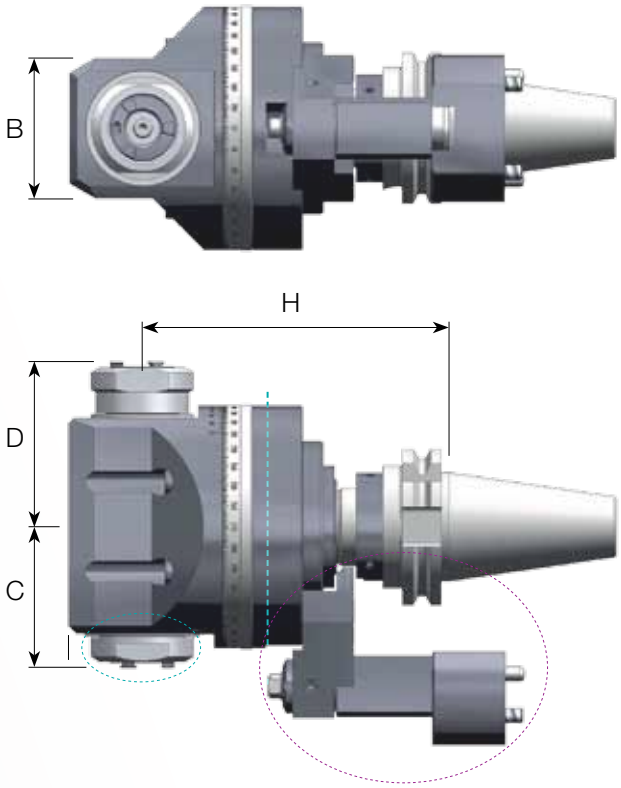


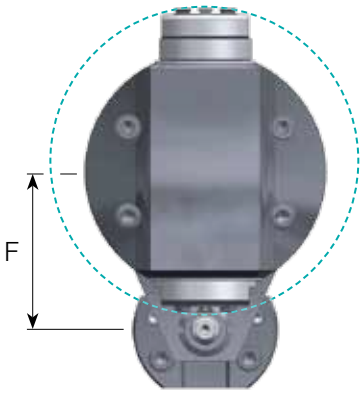


# Right Angle Heads with dual output - **standard duty**

| Part No. | Input | Output | RPM | torque | lb | H | B | C | D | F | IC |
|---|---|---|---|---|---|---|---|---|---|---|---|
| 7 039 44 054 | CAT 40 | ER 20 UT | 8000 | 25 | 15 | 125.5 | 57 | 57.5 | 67.5 | 65 | |
| 7 039 44 052 | BT 40 | ER 20 UT | 8000 | 25 | 15 | 125.5 | 57 | 57.5 | 67.5 | 65 | |
| 7 039 54 015 | HSK 63 | ER 20 UT | 8000 | 25 | 15 | 132.5 | 57 | 57.5 | 67.5 | 65 | |
| 7 039 66 081 | CAT 50 | ER 32 UT | 6000 | 60 | 29.5 | 180 | 84 | 75.1 | 75.1 | 110 | |
| 7 039 66 079 | BT 50 | ER 32 UT | 6000 | 60 | 29.5 | 190 | 84 | 75.1 | 75.1 | 110 | |
| 7 039 76 010 | HSK 100 | ER 32 UT | 6000 | 60 | 29.5 | 190 | 84 | 75.1 | 75.1 | 110 | |

# Right Angle Heads with dual output - **heavy duty**

- Performs two machining operations
- Eliminates the need for two tools
- Rigid Design
- Larger capacity
- Standard with u-tec output
- Maximum torque: 60 Nm
- Maximum RPM: 8000
- Gear Ratio: 1:1

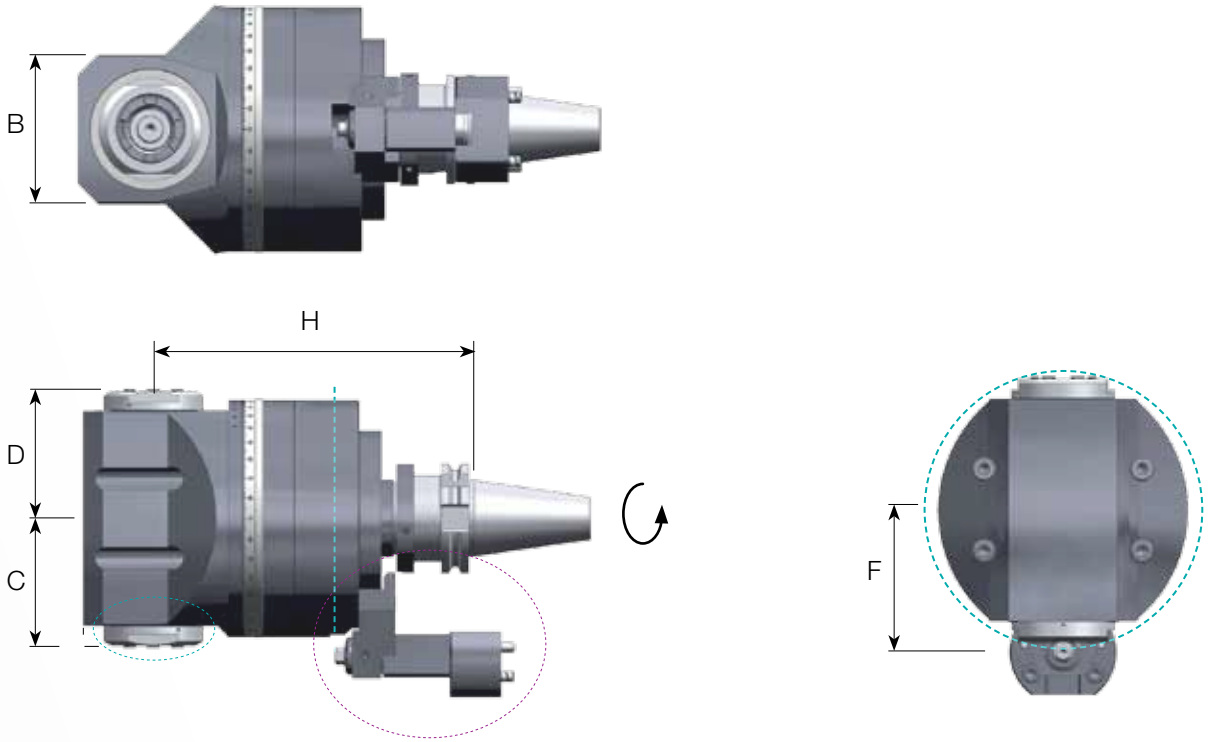


# Right Angle Heads with dual output - **heavy duty**

| Part No. | Input | Output | RPM | torque | lb | H | B | C | D | F | IC |
|---|---|---|---|---|---|---|---|---|---|---|---|
| 7 039 46 053 | CAT 40 | ER 32 UT | 8000 | 60 | 22 | 187 | 84 | 75.1 | 75.1 | 65 | |
| 7 039 46 051 | BT 40 | ER 32 UT | 8000 | 60 | 22 | 187 | 84 | 75.1 | 75.1 | 65 | |
| 7 039 56 014 | HSK 63 | ER 32 UT | 8000 | 60 | 22 | 187 | 84 | 75.1 | 75.1 | 65 | |
| 7 039 67 058 | CAT 50 | ER 40 UT | 6000 | 60 | 31.5 | 180 | 84 | 92.1 | 92.1 | 110 | |
| 7 039 67 062 | BT 50 | ER 40 UT | 6000 | 60 | 31.5 | 190 | 84 | 92.1 | 92.1 | 110 | |
| 7 039 77 010 | HSK 100 | ER 40 UT | 6000 | 60 | 31.5 | 190 | 84 | 92.1 | 92.1 | 110 | |

# Universal Angle Heads +/- 90° adjustable - **standard duty**

- Ideal for machining at compound angles
- Can be tool changed on most machines
- Standard with u-tec output
- Maximum torque: 25 Nm
- Maximum RPM: 8000
- Gear Ratio: 1:1

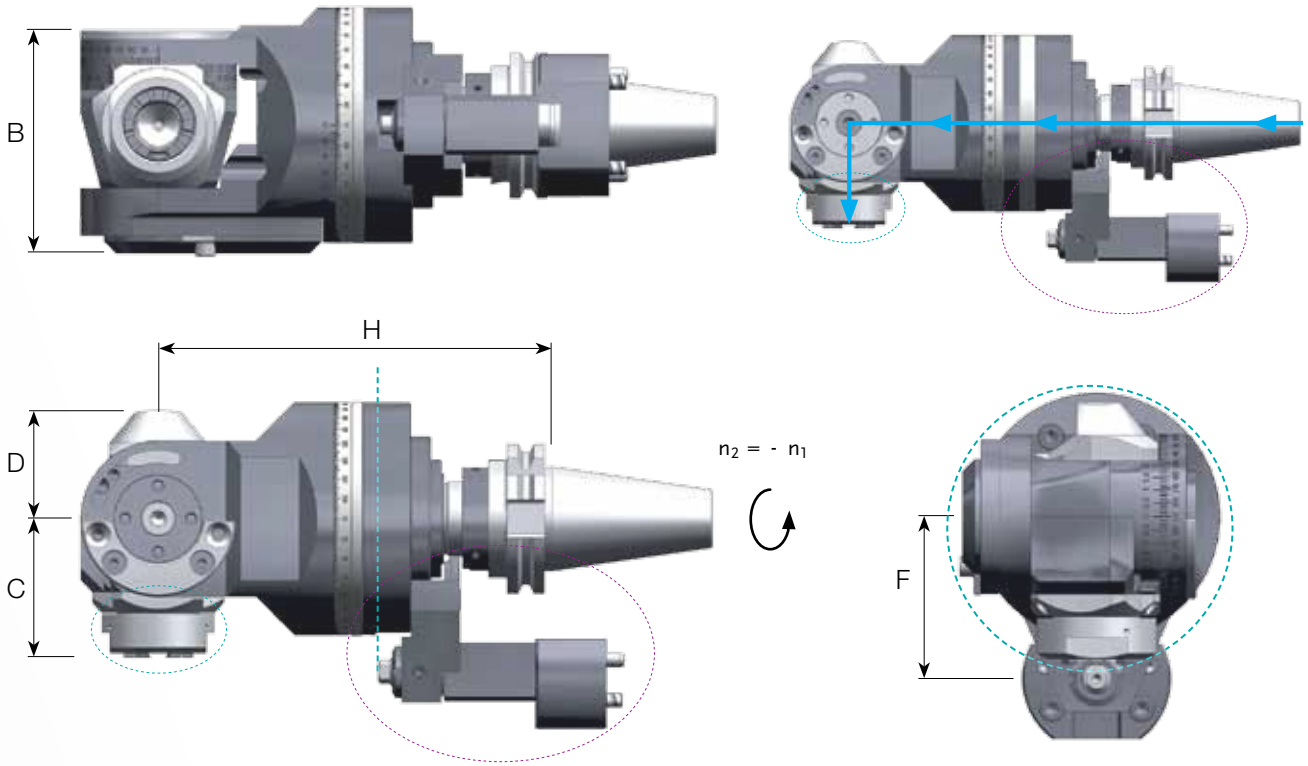


# Universal Angle Heads +/- 90° adjustable - **standard duty**

| Part No. | Input | Output | RPM | torque | lb | H | B | C | D | F | IC |
|---|---|---|---|---|---|---|---|---|---|---|---|
| 7 043 23 003** | BT 30 | ER 11 | 8000 | 5 | 14 | 153 | 59 | 37.7 | 26.5 | 65 | |
| 7 043 23 005** | BT 30 | ER 11 | 8000 | 5 | 14 | 165 | 59 | 37.7 | 44 | 65 | 70 bar |
| 7 040 45 016 | CAT 40 | ER 25 UT | 8000 | 25 | 14 | 167.5 | 94 | 58.9 | 46 | 65 | |
| 7 040 45 018 | CAT 40 | ER 25 UT | 8000 | 25 | 14 | 185.5 | 94 | 58.9 | 46 | 65 | 70 bar |
| 7 040 45 011* | CAT 40 | ER 25 UT | 8000 | 25 | 14 | 167.5 | 94 | 58.9 | 46 | 59 | |
| 7 040 46 028* | CAT 40 | ER 25 UT | 8000 | 25 | 14 | 185.5 | 94 | 58.9 | 46 | 59 | 70 bar |
| 7 040 45 006 | BT 40 | ER 25 UT | 8000 | 25 | 14 | 167.5 | 94 | 58.9 | 46 | 65 | |
| 7 040 45 014 | BT 40 | ER 25 UT | 8000 | 25 | 14 | 185.5 | 94 | 58.9 | 46 | 65 | 70 bar |
| 7 040 55 000 | HSK 63 | ER 25 UT | 8000 | 25 | 14 | 174.5 | 94 | 58.9 | 46 | 65 | |
| 7 040 55 001 | HSK 63 | ER 25 UT | 8000 | 25 | 14 | 192.5 | 94 | 58.9 | 46 | 65 | 70 bar |
| 7 040 65 005 | CAT 50 | ER 25 UT | 6000 | 25 | 34 | 253 | 94 | 58.9 | 46 | 110 | |
| 7 040 65 018 | CAT 50 | ER 25 UT | 6000 | 25 | 34 | 253 | 94 | 58.9 | 46 | 110 | 70 bar |
| 7 040 65 009 | BT 50 | ER 25 UT | 6000 | 25 | 34 | 263 | 94 | 58.9 | 46 | 110 | |
| 7 040 65 002 | BT 50 | ER 25 UT | 6000 | 25 | 34 | 263 | 94 | 58.9 | 46 | 110 | 70 bar |
| 7 040 75 001 | HSK 100 | ER 25 UT | 6000 | 25 | 34 | 263 | 94 | 58.9 | 46 | 110 | |
| 7 040 75 006 | HSK 100 | ER 25 UT | 6000 | 25 | 34 | 263 | 94 | 58.9 | 46 | 110 | 70 bar |

** RoboDrill specific torque arm and stop block

* Haas specific torque arm and stop block

# Universal Angle Heads +/- 90° adjustable - **heavy duty**

- Ideal for machining at compound angles
- Extremely rigid design
- Larger capacity
- External nut style
- Maximum torque: 50 Nm
- Maximum RPM: 6000
- Gear Ratio: 1:1

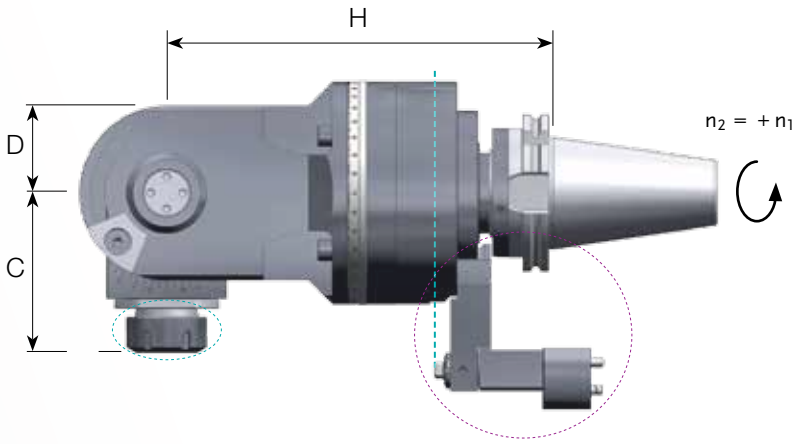


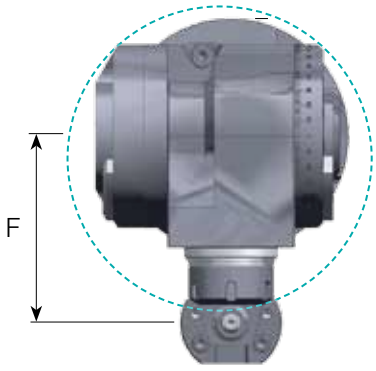


# Universal Angle Heads +/- 90° adjustable - **heavy duty**

| Part No. | Input | Output | RPM | torque | lb | H | B | C | D | F | IC |
|---|---|---|---|---|---|---|---|---|---|---|---|
| 7 040 66 006 | CAT 50 | ER 32 | 6000 | 50 | 37 | 240 | 140 | 99 | 54 | 110 | |
| 7 040 66 010 | BT 50 | ER 32 | 6000 | 50 | 37 | 250 | 140 | 99 | 54 | 110 | |
| 7 040 76 001 | HSK 100 | ER 32 | 6000 | 50 | 37 | 250 | 140 | 99 | 54 | 110 | |

# Solving the toughest application challenges with **custom designs and special tooling**

Extended length tool for longer reach

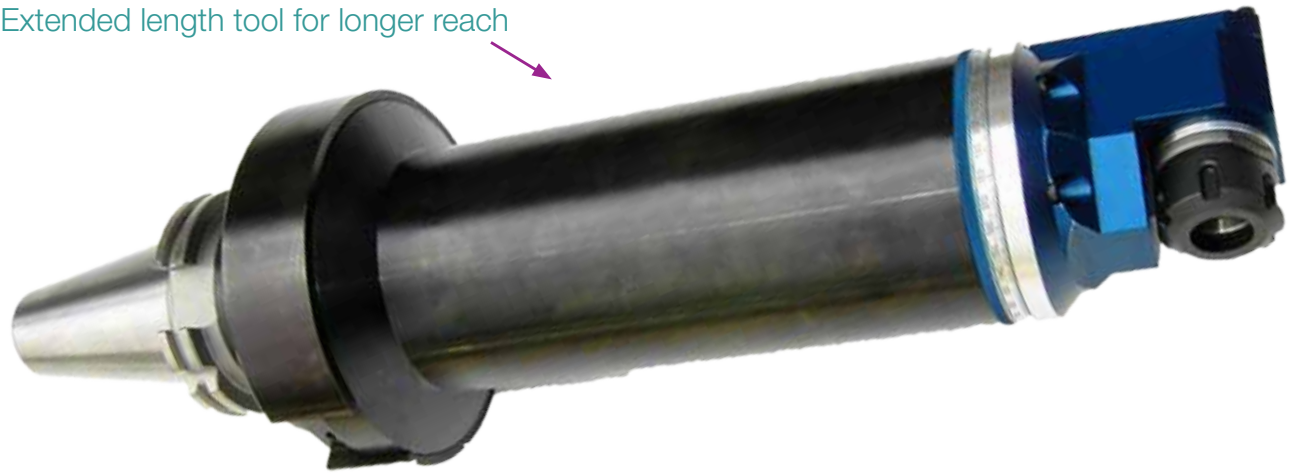

Spline cutting tool

Multiple Spindle drill head

heimatec®

# Heimatec offers the widest range of Live Tools for the most popular machines in the industry.

- DMG Mori Seiki
- Doosan
- Emag
- Emco
- Eurotech
- Feeler
- Haas
- Hardinge
- Hurco
- Hwacheon
- Hyundai
- Mazak
- Miyano
- Murata
- Nakamura
- Okuma
- Samsung
- Spinner
- Takisawa
- Victor Fortune
- Yama Seiki

Standard Axial (Straight) Tool

Standard Radial (90°) Tool

Universal Adjustable Angle Tool
(High Torque)

Standard Axial Twin Spindle Tool

heimatec®

Precision Tools

Visit us online at www.heimatecinc.com

16 E. PIPER LANE, SUITE 129 • PROSPECT HEIGHTS, IL 60070 • PHONE: (847) 749-0633